Universitatea
Politehnica
Timișoara

Patent Requests

INVENTORS: GONTEAN AUREL-ŞTEFAN, CERNĂIANU MIHAIL OCTAVIAN

INTELLIGENT CONTROL DEVICE FOR LIGHT SWITCHES

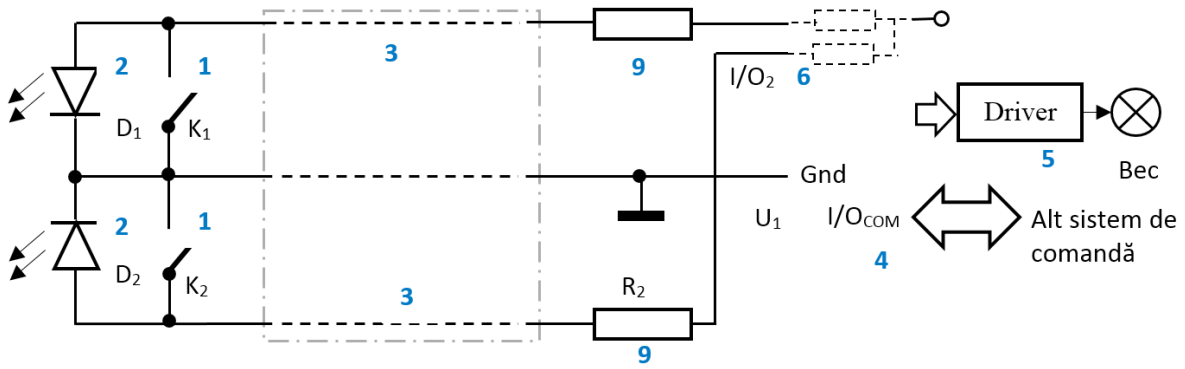

The invention relates to a light control switch integrated in a lighting system controlled by the microcontroller, for domestic or industrial premises lighting. The intelligent control device warning light switch invention is compatible with existing wiring in buildings where lighting is controlled by electronic systems, minimizing the energy consumed by the warning lights (comfort and safety elements), consisting of a microcontroller, a power driver block, classic switches (with return) equipped with warning light (LED) optional wire connections and photo sensors , proximity sensors respectively.

The Intelligent light control switches invention has the following advantages :

- Removes the power dissipated in each warning light (about 0.5 W or 0,012 kWh daily)
- Simplicity
- Compatibility with intelligent lighting
- Compatibility with traditional wiring

INVENTORS: GONTEAN AUREL-ŞTEFAN, CERNĂIANU MIHAIL OCTAVIAN

THERMO-ELECTRIC HYBRID SOLAR SYSTEM

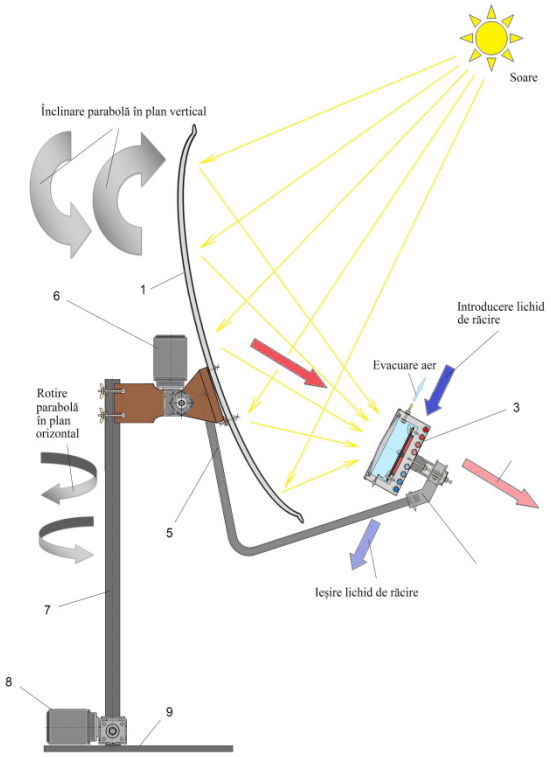

The invention relates to a solar thermal - electric hybrid, which produces hot water and electricity using thermoelectric modules.
Thermo-electric solar hybrid system according to the invention is composed of thermoelectric modules, and solar concentrator photovoltaic cells that convert heat to increase efficiency and reduce losses by convection, using a vacuum chamber that allows the positioning unit conversion at any position and allows adjusting the amount wastewater heat transferred by replacing hexagonal mirror solar concentrator photovoltaic.
The thermal solar-electric hybrid system according to the invention has the following advantages:

- protects the thermoelectric module enclosure from moisture and other natural elements by using the cylindrical shape vacuum device.
- decreases the thermal conductance of the thermoelectric modules by removing the air, thus preventing heat transfer between the hot and cold modules .
- decreases the overall thermal conductance of the thermoelectric conversion module by the use of fastening elements of the glass fiber .
- helps to reduce heat loss by convection due to the use of a vacuum environment.
- provides the possibility to adjust the amount of heat transferred to the assembly by replacing the selective conversion reflecting mirror photovoltaic cells.

INVENTORS: NANU SORIN, COICHECI COSMIN, CRECAN RAREŞ-CRISTIAN, DANCI PAUL VALENTIN, ILE VIRGIL SEBASTIAN

HARDWARE AND SOFTWARE PLATFORM TO REMOTELY CONTROL AND MONITOR APPLICATIONS VIA THE INTERNET

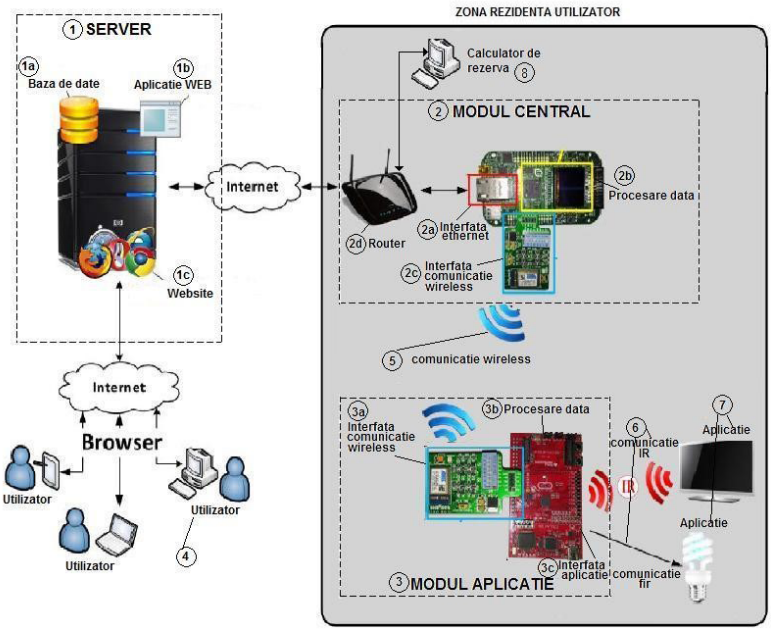

The invention relates to a device for monitoring and the automatic control of the domestic and industrial applications using modules wirelessly connected to the internet. All functions of this equipment can be carried out remotely via an Internet connection from a computer or cell phone.
The problem solved by the invention is to realize a modular, easy to install and operate system for monitoring and automatization, for domestic and industrial applications placed at a user residence. The system can be developed by the user, giving him an effective framework for communication over the Internet, accessible from any computer or mobile phone.
Controling equipment remotely via the Internet, the consumer and industrial applications of the invention consists of a base module, CENTRAL and several application modules that can be connected optionally . So the minimum configuration is :

One CENTRAL module and one or more APPLICATION module

This structure can be extended to any number of APPLICATION modules with a simple hardware connection, thereby ensuring modularity feature .
Configuration of the software is very simple, with practically no user intervention.
The characteristic of simplicity is the fact that the operations required to perform a specific function by the user:

- No specific technical knowledge in IT , existing application modules , so no intervention of a team of specialists for installation;
- Are naturally suggestive
- Operations that are seemingly more complex are guided by the computer ;
- The application modules can be designed and configured by the user .

INVENTOR: PAVEL ŞTEFAN

COMPRESSED AIR SYSTEM FOR DENTAL UNITS

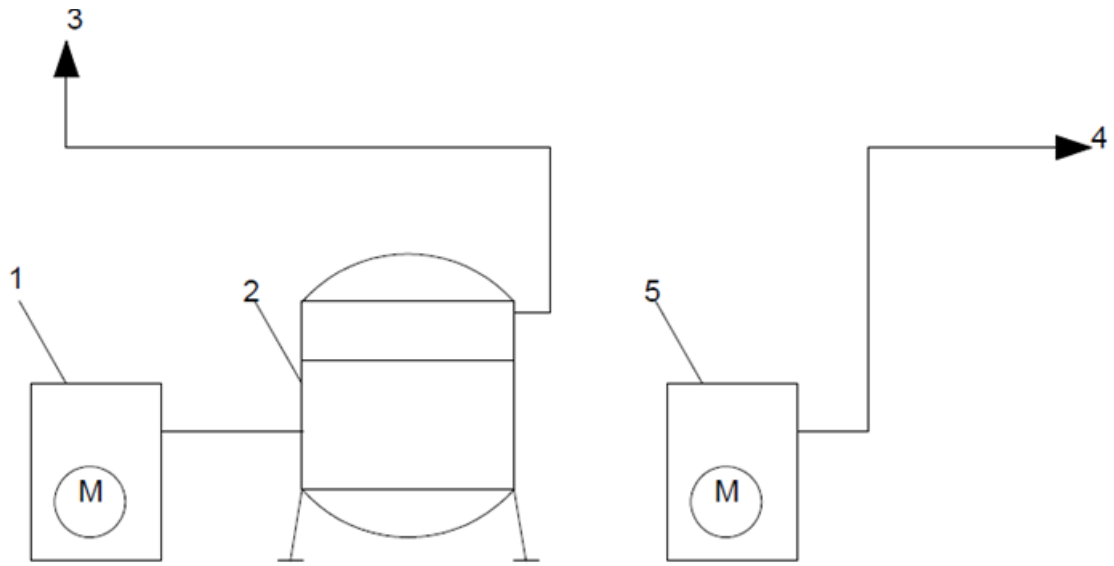

The invention concerns a compressed air system to be used in dental settings that serve multiple dental units.
The technical problem the new system intents to solve is how to automatically manage the distribution of compressed air from the compressed air system between 20.00 and 8 a.m. hours, so that the real needs of the permanent dental emergency compartment are met.
The new system consists of an assembly of devices for compressed air: valves, pressure regulators, manometers, one-way valves, „T" crossings and an automation with hourly and weekly programmer that controls an electric valve.

The new system has the following advantages:
- Increased energy efficiency, through lower energy consumption;
- Lower compressor stress;
- Reduces losses of compressed air in the main compressor unit;
- A safety measure to avoid the accumulation of bacteria (Legionella pneumophila), micro-organisms, air-transmitted viruses, that can appear when the air in the main reservoir is not used for a long period;
- Increased safety in functioning.

INVENTORS: SÎRBU NICUŞOR ALIN, ŞERBAN VIOREL-AUREL

ULTRASONIC DEVICE FOR EVALUATION OF THE MELT FLOW OF POLYMERIC AND COMPOSITES MATERIALS

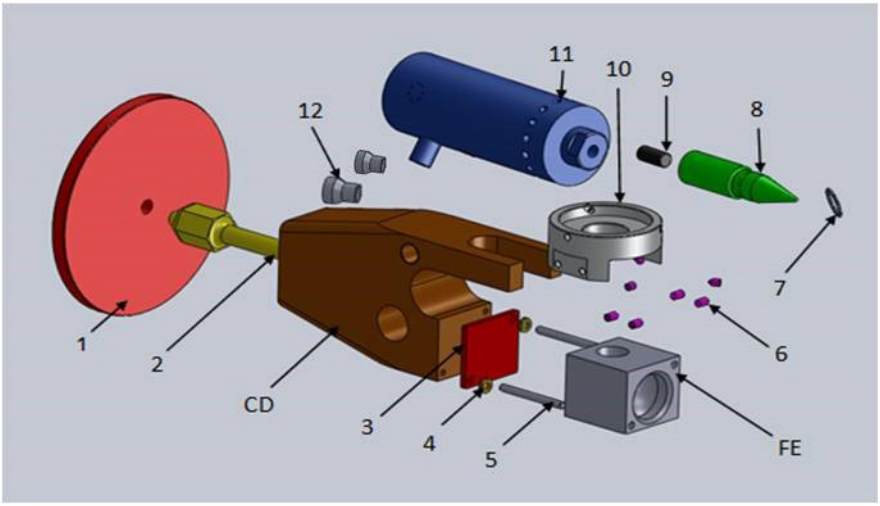

The invention relates to an ultrasonic device used for the evaluation of the melt flow of polymeric and composite materials, which can be used in academic, research and development areas, as well as in the chemical industry, in the manufacturing industry of polymeric materials and composites, in order to evaluate the flowing process due to the beneficial effects of the micro-vibrations with ultrasonic frequency, respectively the increase of the flow rate and reduction of the processing flaws. The ultrasonic device is built in a compact manner and can be easily positioned and fitted on classical processing equipment for polymeric materials by injection or extrusion.

According to the invention, the ultrasonic device for the evaluation of the melt flow rating of polymeric and composite materials is composed of an ultrasonic assembly (AU), which includes a piezoceramic transducer (11), a cone-headed cylindrical sonotrode (8), in steps, the fitting (9) and the heat-resistant silicone rubber ring (7) which seals and centres the ultrasonic assembly (AU) relative to the extrusion dies (FE).
Positioning, fixing and adjusting of the ultrasonic assembly (AU) in the device's body (CD) and in relation to the extrusion dies (FE), which provides also the technological parameter "flow gap - i", is realized either by positioning the holder (10) in relation to the device's body (CD), using a set of feeler gauge of different thickness or by using the screw-nut mechanism, fine-pitched, located in the assembly area of the support (10) and the piezoceramic transducer (11).

In both cases, the mounting of the adjusted position is realized with threaded bolts (6). The positioning and fixing of the ultrasonic device between the plates (fixed and mobile) of the injection or extrusion classic equipment of the polymeric materials or polymer composite melt is realized through the screw-nut mechanism (1 and 2) and the reducing or even eliminating the heat transfer between the device body (R) and the extrusion dies (FE) is carried out by using a thermal insulation textolit (3) and two distance plates (4), which are positioned by means of threaded head guides (5), which are fixed on the device's body (CD) in threaded borings.

Also, the ultrasonic device is equipped with an air cooling system (E) on the piezoceramic transducer (11) and on the device's body (CD); the fixation of the cooling system on the device's body (CD) is realized through rapid coupling (12).
It is mentioned that there is a possibility of the extrusion dies (FE) to be changed according to the technological requirements (size and shape) of the process. So interchangeability can be done easily, achieving a new product involving minimal costs.

INVENTOR: MANEA FLORICA

ELECTRODE AND METHOD FOR FAST ELECTROCHEMICAL DETECTION OF ARSENIC (III) FROM AQUEOUS SOLUTIONS

The invention relates to the elaboration of an electrode and a process for the electrochemical detection of arsenic (III), a highly toxic pollutant from aqueous solutions. Also, the working electrode and the process of the invention can be used both for the detection of other pollutants from water (heavy metals and organic pollutants) and for other applications (the analysis of pharmaceutical products, food quality control and safety, clinical analysis).

The issue to be solved by the invention is to develop a product and a method based on the electrochemical method of fast detection of arsenic (III) from aqueous solutions using a relatively inexpensive electrode material, with a long operating time, exhibiting high electroanalytical performance - limit of detection, sensitivity, reproducibility, accuracy.

The electrode and the method of fast electrochemical determination of the arsenic (III) from aqueous solutions according to the invention consist on the use of an electrode called working electrode, a counter electrode in assembly with a reference electrode, which based on the anode stripping method and using the square wave voltammetry technique allow the contact with the arsenic (III) contaminated water in the presence of an electrolyte, leading to the working electrode electrochemical response in the presence of the pollutant. The working electrode is a composite electrode obtained by dispersing carbon nanotubes in a epoxy matrix and then, electrochemically modified with silver nanoparticles.

The electrode and the method of fast electrochemical detection of arsenic (III) from aqueous solutions according to the invention has the following advantages: very high electroanalytical characteristics (limit of detection, sensitivity, reproducibility, accuracy), low cost of materials used for the working electrode elaboration, long operating time (at least 1 year).

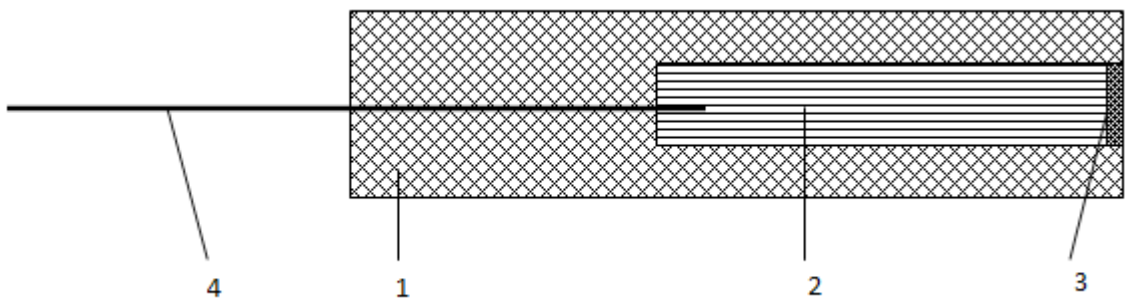

Figure 1. Schematic representation of the electrode

1-cylinder holder, 2-the active cylinder consisting of carbon nanofibers dispersed into an epoxy matrix, 3-a disc-shaped front side decorated by electrochemical deposition of silver nanoparticles, 4- copper wire to assure connection

INVENTOR: ICLĂNZAN TUDOR-ALEXANDRU

MOULDS AND INJECTION PROCESS FOR MINIATURE PARTS

The invention relates to the field of manufacturing miniature parts made of polymeric materials with the injection molded process using ultrasound activation .

The problem to be solved by the invention is to realize an injection mold for the manufacture of as a miniature parts , to avoid the danger of uncontrolled solidification of the material in the areas of low flow to operation without the use of injection machines for the preparation and the polymeric material and ensure an injection cycle as short .

Injection mold and method according to the invention the miniature parts is made from a higher cell subansamlu includes the nodal region of the vibration fixing the resonator body in the λ / 2 and the inside ensure a snug fit with the guided movement of a concentrate adapter wave λ / 2 attached to a movable ultrasonic converter . The hub adapter wave λ / 2 running in the mold during the movement to cut a portion of the polymeric material strip is inserted laterally into a space created in the concentrator and the inlet of the pills attached by screwing to the end of the body the resonator and the central bearing hole injection cuiburi.După cutting under the action of ultrasonic energy melts the polymeric material to a pellet is injected and the lower bearing parts nests . Lower pill nest cavities is attached by screwing the upper end of a second converter ultrasonic concentrator fixed nodal area concentrator in fixed lower mold assembly . Moving the upper mold assembly relative to the fixed lower assembly is guided by guide columns . Ultrasonic activation pill containing nests ensures lower energy production neccesara termopelicular ultrasonic effect throughout solidification preventing uncontrolled flow path and ensuring proper filling of the cavity nests with beneficial effects to mix the material quality and minimizing compliance injection time.

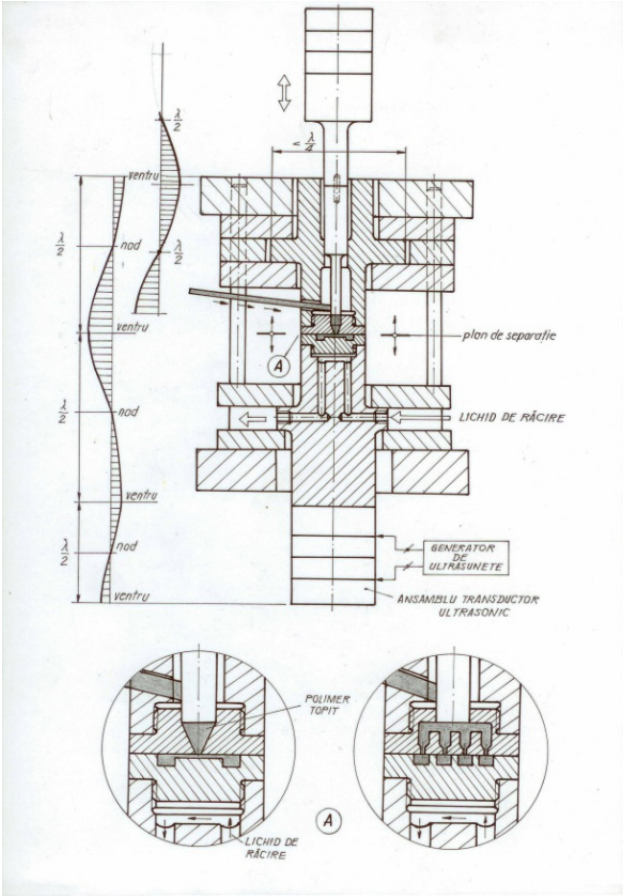

Injection mold and method of miniaturized components according to the invention has the following advantages :

- Ensure injection miniature parts without the use of injection molding machines of conventional design or adapted microinjection , which are expensive and bulky ;
- Ensures avoid uncontrolled solidification of the material injected into the mold to achieve miniature pieces can cool before completion of injection or breaks between cycles ;
- Ensure injection cycle times and thus optimize the process ;
- Ensure easy evacuation of molded parts from the mold and the conditions imposed on them by the quality and accuracy .